VESSEL DRAFTING ENGINEERING

VESSEL SADDLE SUPPORT DETAIL-TYPE3a

DESIGN DATA PGM RUN ***V2.0***

* DESCRIPTION	PV-001		* ITEM NO.	PES21	
* VESSEL I.D	1500	mm	* SHELL TH'K	13	mm
* SADDLE HEIGHT,H	1000	mm	* SADDLE PAD THICKNESS	16	mm
* Dim. "G1"	13	mm	* SADDLE CONTACT ANGLE, ¢	120	o
* Dim. "G2"	13	mm	* SADDLE WEB THICKNESS	16	mm
* Dim. "G3"	25	mm	* SADDLE PAD WIDTH,Tw	500	mm
* BASE PLATE THICKNESS,Bt	19	mm	* BASE PLATE WIDTH,Bw	254	mm
* RIB THICKNESS,Rt	16	mm	* SADDLE PAD EXTENTION, We	40	mm
* RIB DISTANCE, R1	300	mm			

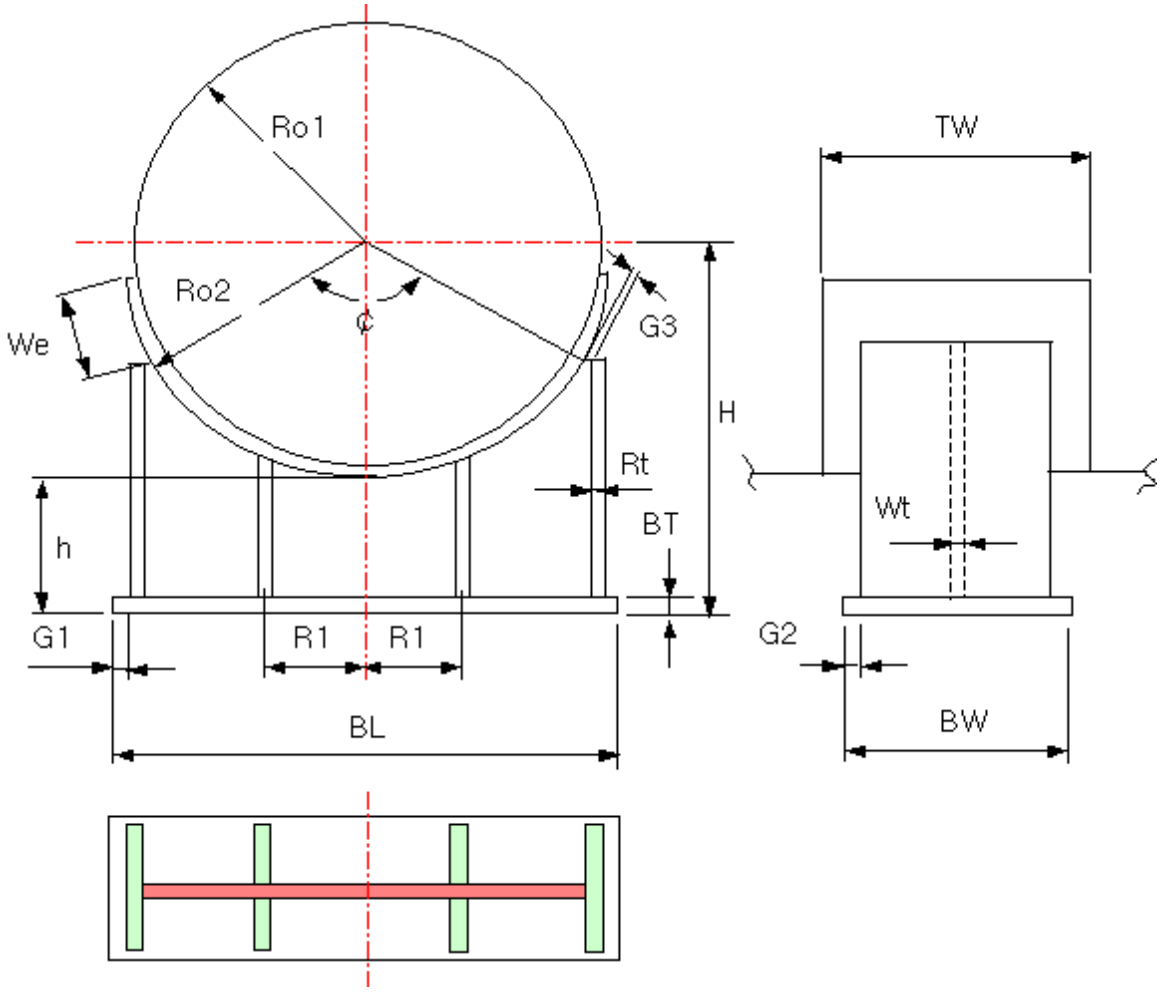

RESULT OF CALCULATION

* Saddle pad to bottom of base, h	221.0	mm	* Base plate length, BL	1,375	mm
* Vessel outside radius, Ro1	763.0	mm	* Saddle pad outside radius, Ro2	779.0	mm
* Saddle web Arc area(Loss)	0.37	m^2	* Saddle web Arc area weight(Loss)	47	Kg
* Saddle Net weight	280	Kg	* Saddle Gross weight	335	Kg

BOM LIST PER SADDLE

* PART NAME	t	W	L	Q'TY	N/WT(Kg)	G/WT (Kg)
* WEB	16	592	1,399	1	57	104
* SADDLE PAD	16	500	1,695	1	106	112
* BASE PLATE	19	254	1,375	1	52	55
* RIB-1	16	228	592	2	34	36
* RIB-2	16	106	265	4	30	32

GO TO TYPE1, TYPE2, TYPE4 , TYPE5

MENU PAGE-->>

Copyright ⓒ 2001 피이에스21 All rights reserved.
Please contact E-mail ***pes21@pes21.com***